FLOW RATE INDICATOR / TOTALISER — FLOTO

6-DIGIT RATE INDICATOR, 8-DIGIT TOTALISER

- 6 digit flow rate indicator, 8 digit flow totaliser
- Inputs : Analog inputs : 0~20 mA, 4~20 mA, 0~5 volts, 1~5 volts, 0~10 volts
  Pulse input : 0~10 khz
  Ac input : ± 50mV
- Four setpoints assignable to either flow rate or totaliser
- Programmable flow rate, setpoints and relay modes, etc.
- Application : Monitoring and controlling continuous as well as batch flow processes
- Isolated programmable 4~20 mA retransmission output
- RS 485 / MODBUS
- Password protected programming and reset
- Programmable start, stop, reset functions

SPECIFICATIONS

All specifications at ambient of 25 C, unless specified otherwise

INPUT

Input	
Analog inputs	0~20 mA, 4~20 mA, 0~5 volts, 1~5 volts, 0~10 volts
Pulse input	0~10 khz
Ac input	±50 mV
	(see ordering information)
Transmitter supply	22 V nominal, 30 mA max
Accuracy	0.1% of span typical, 0.2% of span maximum
Flow rate range	0.00001 to 999999 EU
Flow totaliser range	0 to 99999999
Memory	Non volatile, indefinite retention

INDICATION

Flow rate	Upper : 6 digit, 7 segment 0.56" (14.2 mm) red LED display
Totaliser	Lower : 8 digit, 7 segment 0.3" (7.62 mm) green LED display
Status indication	LEDs for relay status LEDs for flow rate unit LEDs for communication

VIEW MODE

Integrated totaliser	0 to 99999999
Roll over count of Integrated totaliser	10^6
Peak	Maximum flowrate after power on / reset
Valley	Minimum flowrate after power on / reset

OUTPUTS

No. of relays	0/2/4 relays for either flow rate or totaliser
Relay contact type	NO-C-NC
Relay contact rating	5A / 230V AC, resistive
No. of analog outputs	0 / 1 (current or voltage)
Current output	4~20 mA / 0~20 mA / 20~4 mA / 20~0 mA isolated from input
Maximum load for current output	500 ohms
Voltage output	0~10 V or user specified
Load for voltage output	>10 Kohms
Mutual isolation between input/output/supply	1KV AC RMS/1 minute, 250 V AC RMS continuous

COMMUNICATION

Port	RS485
Protocol	Modbus RTU
Slave ID	User programmable (1~256)

PROGRAMMABLE PARAMETERS

Input type	User selectable (DIP also to be set)
Input mode	Linear, Square root
Setpoints	For flow rate : 0 to 999999 For totaliser : 0 to 99999999
Resolution	
Flow rate	0.00001 to 1
Totaliser	0.0000001 to 1
High scale for flow rate	0.1 to 999999
Low scale for flow rate	0 to 999999
Digital filter	A(minimum) ~ F(maximum)
Time base unit	Second, minute, hour, day
Hysteresis for flow rate alarms	0.001 to 9999
Flow rate alarm logic	Full scale high, Full scale low, Deviation high, Deviation low, band in, band out
Flow rate alarm type	Self reset or latched, enabled/disabled at power on
Alarm acknowledge	Front panel function used to reset relay in alarm condition
Offset	0 to 9999
Relay logic for totaliser	Latched mode, Autoreset mode
Auto reset time	0.1 to 99.9 seconds
Setpoint lock	On, Off
Program lock	On, Off
Relay action	Reverse/Direct
Conversion factor	0.01 to 9999.99
Start, stop and reset functions	Programmable

OTHER

Programming	Through 4 tactile keys
Enclosure construction	Plug-in
Dimensions (in mm)	96(H) x 96(W) x 100(D)
Mounting	Panel mount
Panel cutout	92 x 92 mm
Supply voltage	a) 85~265 V AC, 50/60 Hz b) 20~35 V DC
Power consumption	4 watts maximum
Operating ambient temperature	0~50 °C
Relative humidity	Below 90%, non condensing

CAT#282R4/P1/2/300911/A

FLOW RATE INDICATOR / TOTALISER — FLOTO

6-DIGIT RATE INDICATOR, 8-DIGIT TOTALISER

CONNECTION DIAGRAM

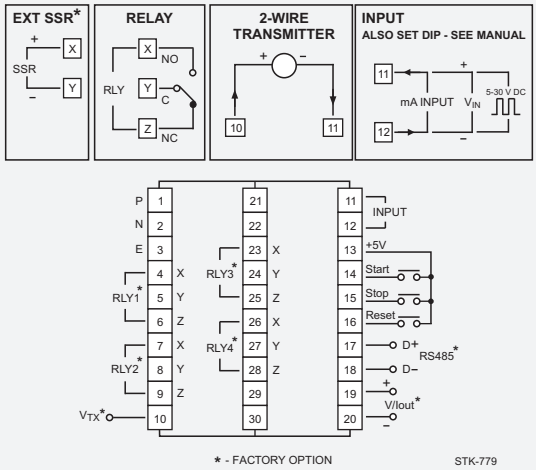

ORDERING INFORMATION

FLOTO will be supplied with the following standard specifications :

Input type	4~20 mA

ORDER CODE	
2210	A

A	Output Configuration			
	Relay for flow rate	Relay for totaliser	4~20 mA output	RS485
00	0	0	0	0
01	0	2	0	0
02	2	2	0	0
03	2	2	1	0
04	2	2	0	1
05	2	2	1	1

Ordering Options
The following ordering options are available on request.
Minimum order quantity and/or minimum order value may apply.

	Option	Details
1.	Input	0~10 Khz
2.	Analog output	0~10 V DC
3.	Supply voltage	24 V DC

ALSO AVAILABLE : FLOTO46

- 4 digit flow rate indicator,
  6 digit flow totaliser
- Inputs : Analog inputs : 0~20 mA, 4~20 mA, 0~5 volts,
  1~5 volts, 0~10 volts
  Pulse input : 0~10 khz
  Ac input : ±50 mV
- Four setpoints assignable to either flow rate or totaliser
- Programmable flow rate, setpoints and relay modes, etc.
- Application : Monitoring and controlling continuous as well as batch flow processes
- Isolated programmable 4~20 mA retransmission output
- RS 485 / MODBUS
- Password protected programming and reset
- Programmable start, stop, reset functions

radix®
AN ISO 9001:2008 COMPANY

INSTRUMENTS T : + 91 22 42537777 x 701 F : + 91 22 42537700 E : sales@radix.co.in
SENSORS T : + 91 22 42537777 x 732 F : + 91 22 42537700 E : sensors@radix.co.in
GAUGES T : + 91 22 42537777 x 733 F : + 91 22 42537700 E : gauges@radix.co.in
AUTOMATION C : 0-9322405471 C : 0-9324319150

SALES INQUIRIES
1800-22-radix
1800-22-7234

Radix Electrosystems Pvt Ltd, B-14, 2nd Floor, Ghanshyam Indl Estate, Veera Desai Road, Andheri (West), Mumbai - 400 053, India
Tel : + 91 22 42537777 Fax : + 91 22 42537700 Email : sales@radix.co.in www.radix.co.in

www.radix.co.in

CAT#282R4/P2/2/300911/A